WALL INSTALL TEMPLATE

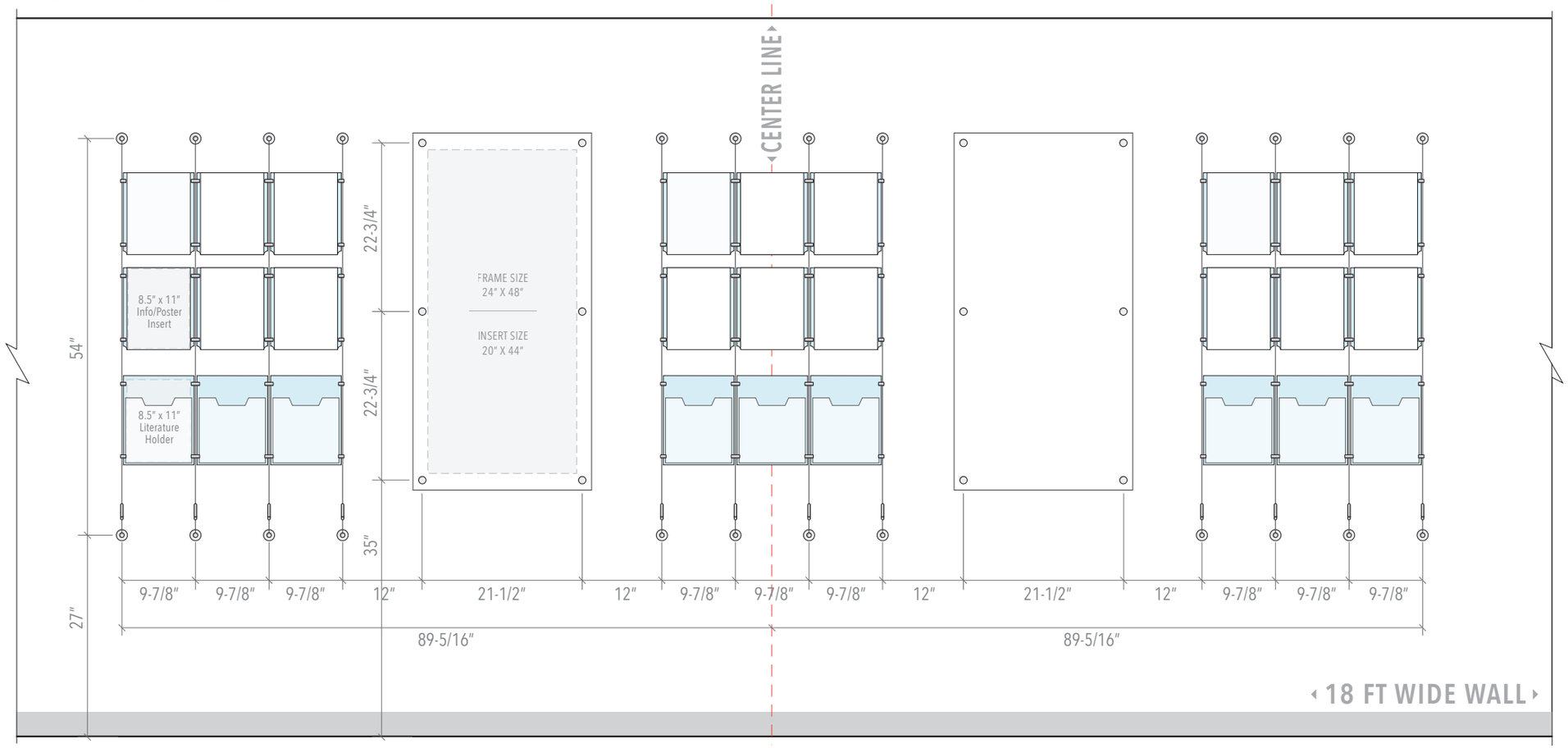

DETAILS:

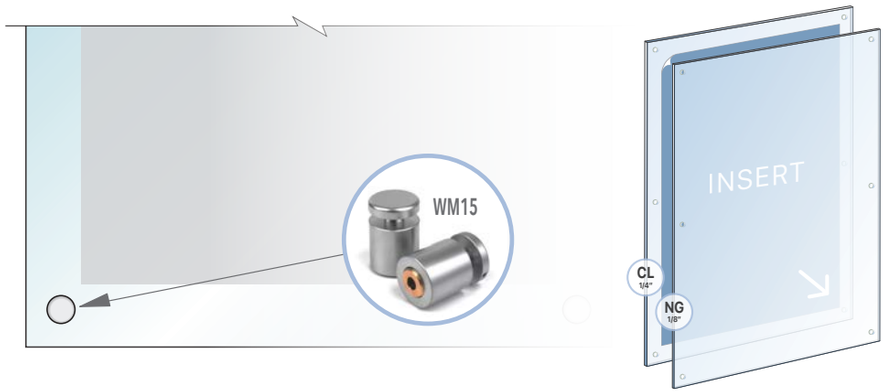

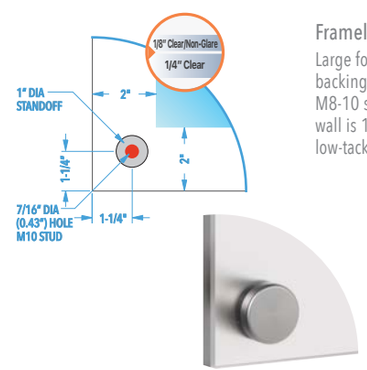

Frameless Acrylic Frames for Info/Poster Inserts / Standoff Wall Mounted

Large format acrylic frames are supplied as a set with 1/4" thick "clear" acrylic panel for use as backing and 1/8" thick "non-glare" acrylic panel for use as front cover. Panels are drilled for M8-10 studs and supplied with six (6 ea) 1" diameter standoff wall supports. Projection from wall is 1". Inserts are mounted in between the two pieces of acrylic and fixed in place with low-tack (*3MTM 9415PC Removable Repositionable*) double sided adhesive tape.

Note: Non-glare (non-reflective) acrylic front cover helps to reduce the glare and provides a mild protection against harmful UV rays.

NOVADISPLAY
INNOVATIVE DISPLAY SOLUTIONS

Nova Display Systems, Inc.
875 Wilson St., Ste. A-B
Eugene, OR 97402
541.505.7450
541.505.9919 fax
sales@novadisplay.com
www.novadisplaysystems.com

Wall Display Concept

ID: DC2301

Title: Literature Wall Display

Display Size:
54"H x 180"W

Wall Size Requirements:
18 FT (216 IN) Wide

Wall Install Template

ID: DC2301-WT

Note: Dimensions on the drawing display hardware mounting points on the wall. These are suggested dimensions and can be slightly modified to accommodate for your own wall specifics.

Note: This drawing is the property of Nova Display Systems and is not to be reproduced or copied in whole or in part. It is only to be used for the project and site specifically identified herein and is not to be used on any other projects, or for the purpose of manufacturing and reproduction. It is to be returned upon request.

Sheet:

Page: 1 of 1 **Scale:** n/a